NOTE:
ALL DIM. TAKEN FROM
BASE CABINET

1/2" WIDE X 1/4"
DEEP LEDGE FOR
GLASS

1/4" TEMPERED GLASS

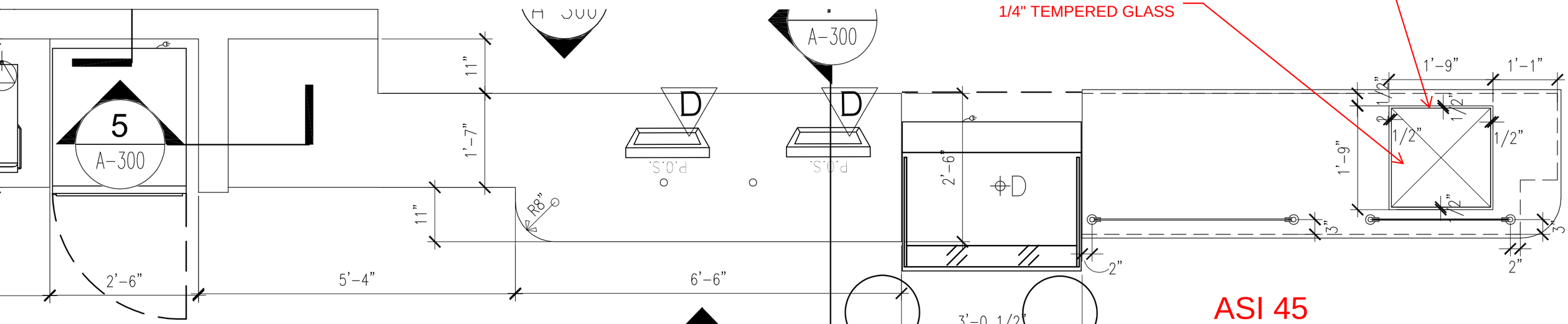


ASI 45
3/4/26

3
A-300

# CASEWORK PLAN

SCALE: 1/2" = 1'-0"

2
A-300